YASKAWA

YRC1000micro OPTIONS
INSTRUCTIONS

FOR GROUP CHANGE FUNCTION

Upon receipt of the product and prior to initial operation, read these instructions thoroughly, and retain for future reference.

MOTOMAN INSTRUCTIONS

MOTOMAN-□□□ INSTRUCTIONS
YRC1000micro INSTRUCTIONS
YRC1000micro OPERATOR'S MANUAL
YRC1000micro MAINTENANCE MANUAL
YRC1000micro ALARM CODES (MAJOR ALARMS) (MINOR ALARMS)

The YRC1000micro alarm codes above consists of "MAJOR ALARMS" and "MINOR ALARMS".

Please have the following information available when contacting Yaskawa Customer Support:
- System
- Primary Application
- Software Version *(Located on Programming Pendant by selecting: {Main Menu} - {System Info} - {Version})*
  Robot Serial Number *(Located on robot data plate)*
  Robot Sales Order Number *(Located on controller data plate)*

Part Number: 181283-1CD
Revision: 0

Yaskawa Customer Support
- 24-hour Telephone Number: **(937) 847-3200**
  Use for urgent or emergency needs for technical support, service and/or replacement parts
- Routine Technical Inquiries: *techsupport@motoman.com*
  Allow up to 36 hours for response

MANUAL NO.
HW1484566

DANGER

- This manual explains the group change function of the YRC1000micro system. Read this manual carefully and be sure to understand its contents before handling the YRC1000micro. Any matter not described in this manual must be regarded as “prohibited” or “improper”.
- General information related to safety are described in “Chapter 1. Safety” of the YRC1000micro INSTRUCTIONS. To ensure correct and safe operation, carefully read “Chapter 1. Safety” of the YRC1000micro INSTRUCTIONS.

CAUTION

- In some drawings in this manual, protective covers or shields are removed to show details. Make sure that all the covers or shields are installed in place before operating this product.
- YASKAWA is not responsible for incidents arising from unauthorized modification of its products. Unauthorized modification voids the product warranty.

NOTICE

- The drawings and photos in this manual are representative examples and differences may exist between them and the delivered product.
- YASKAWA may modify this model without notice when necessary due to product improvements, modifications, or changes in specifications. If such modification is made, the manual number will also be revised.
- If your copy of the manual is damaged or lost, contact a YASKAWA representative to order a new copy. The representatives are listed on the back cover. Be sure to tell the representative the manual number listed on the front cover.

Notes for Safe Operation

Read this manual carefully before installation, operation, maintenance, or inspection of the YRC1000micro.

In this manual, the Notes for Safe Operation are classified as “DANGER”, “WARNING”, “CAUTION”, or “NOTICE”.

DANGER

Indicates an imminently hazardous situation which, if not avoided, will result in death or serious injury. Safety Signs identified by the signal word DANGER should be used sparingly and only for those situations presenting the most serious hazards.

WARNING

Indicates a potentially hazardous situation which, if not avoided, will result in death or serious injury. Hazards identified by the signal word WARNING present a lesser degree of risk of injury or death than those identified by the signal word DANGER.

CAUTION

Indicates a hazardous situation, which if not avoided, could result in minor or moderate injury. It may also be used without the safety alert symbol as an alternative to “NOTICE”.

NOTICE

NOTICE is the preferred signal word to address practices not related to personal injury. The safety alert symbol should not be used with this signal word. As an alternative to “NOTICE”, the word “CAUTION” without the safety alert symbol may be used to indicate a message not related to personal injury.

Even items described as “CAUTION” may result in a serious accident in some situations.
At any rate, be sure to follow these important items.

NOTE

To ensure safe and efficient operation at all times, be sure to follow all instructions, even if not designated as “DANGER”, “WARNING” and “CAUTION".

DANGER

- Before operating the manipulator, make sure the servo power is turned OFF by performing the following operations. When the servo power is turned OFF, the SERVO ON LED on the programming pendant is turned OFF.
  - Press the emergency stop button on the programming pendant or on the external control device, etc.
  - Disconnect the safety plug of the safety fence. (when in the play mode or in the remote mode)

If operation of the manipulator cannot be stopped in an emergency, personal injury and/or equipment damage may result.

Fig. : Emergency Stop Button

- Before releasing the emergency stop, make sure to remove the obstacle or error caused the emergency stop, if any, and then turn the servo power ON.

Failure to observe this instruction may cause unintended movement of the manipulator, which may result in personal injury.

Fig. : Release of Emergency Stop

- Observe the following precautions when performing a teaching operation within the manipulator's operating range:
  - Be sure to perform lockout by putting a lockout device on the safety fence when going into the area enclosed by the safety fence. In addition, the operator of the teaching operation must display the sign that the operation is being performed so that no other person closes the safety fence.
  - View the manipulator from the front whenever possible.
  - Always follow the predetermined operating procedure.
  - Always keep in mind emergency response measures against the manipulator’s unexpected movement toward a person.
  - Ensure a safe place to retreat in case of emergency.

Failure to observe this instruction may cause improper or unintended movement of the manipulator, which may result in personal injury.

- Confirm that no person is present in the manipulator's operating range and that the operator is in a safe location before:
  - Turning ON the YRC1000micro power
  - Moving the manipulator by using the programming pendant
  - Running the system in the check mode
  - Performing automatic operations

Personal injury may result if a person enters the manipulator's operating range during operation. Immediately press an emergency stop button whenever there is a problem. The emergency stop button is located on the right of the programming pendant.

- Read and understand the Explanation of the Warning Labels before operating the manipulator.

DANGER

- In the case of not using the programming pendant, be sure to supply the emergency stop button on the equipment. Then before operating the manipulator, check to be sure that the servo power is turned OFF by pressing the emergency stop button.
  Connect the external emergency stop button to the 4-14 pin and 5-15 pin of the Safety connector (Safety).
- Upon shipment of the YRC1000micro, this signal is connected by a jumper cable in the dummy connector. To use the signal, make sure to supply a new connector, and then input it.

If the signal is input with the jumper cable connected, it does not function, which may result in personal injury or equipment damage.

WARNING

- Perform the following inspection procedures prior to conducting manipulator teaching. If there is any problem, immediately take necessary steps to solve it, such as maintenance and repair.
  - Check for a problem in manipulator movement.
  - Check for damage to insulation and sheathing of external wires.
- Return the programming pendant to a safe place after use.

If the programming pendant is left unattended on the manipulator, on a fixture, or on the floor, etc., the Enable Switch may be activated due to surface irregularities of where it is left, and the servo power may be turned ON. In addition, in case the operation of the manipulator starts, the manipulator or the tool may hit the programming pendant left unattended, which may result in personal injury and/or equipment damage.

Definition of Terms Used Often in This Manual

The MOTOMAN is the YASKAWA industrial robot product.

The MOTOMAN usually consists of the manipulator, the YRC1000micro controller, manipulator cables, the YRC1000micro programming pendant (optional), and the YRC1000micro programming pendant dummy connector (optional).

In this manual, the equipment is designated as follows:

Equipment	Manual Designation
YRC1000micro controller	YRC1000micro
YRC1000micro programming pendant	Programming pendant (optional)
Cable between the manipulator and the controller	Manipulator cable
YRC1000micro programming pendant dummy connector	Programming pendant dummy connector (optional)

Descriptions of the programming pendant keys, buttons, and displays are shown as follows:

Equipment		Manual Designation
Programming Pendant	Character Keys /Symbol Keys	The keys which have characters or symbols printed on them are denoted with [ ]. ex. [ENTER]
	Axis Keys /Number Keys	[Axis Key] and [Numeric Key] are generic names for the keys for axis operation and number input.
	Keys pressed simultaneously	When two keys are to be pressed simultaneously, the keys are shown with a “+” sign between them, ex. [SHIFT]+[COORD]
	Mode Key	Three kinds of modes that can be selected by the mode key are denoted as follows: REMOTE, PLAY, or TEACH
	Button	Three buttons on the upper side of the programming pendant are denoted as follows: HOLD button START button EMERGENCY STOP button
	Displays	The menu displayed in the programming pendant is denoted with { }. e.g. {JOB}
PC Keyboard		The name of the key is denoted. e.g. Ctrl key on the keyboard

Description of the Operation Procedure

In the explanation of the operation procedure, the expression "Select • • • " means that the cursor is moved to the object item and [SELECT] is pressed, or that the item is directly selected by touching the screen.

Registered Trademark

In this manual, names of companies, corporations, or products are trademarks, registered trademarks, or brand names for each company or corporation. The indications of (R) and TM are omitted.

Contents

1 Outline 1-1

2 Group Change Instruction 2-1

2.1 GRPCHG Instruction 2-1

2.2 Registration of Instruction 2-2

3 Signal Allocation 3-1

3.1 Hand Identification Signals 3-1

3.2 Identification Signals for ATC Chuck/Unchuck 3-1

4 Job Examples 4-1

5 Alarm Message 5-1

1 Outline

The group change function attaches/detaches a tool with multiple external axes, such as end effector, etc (hereinafter called “hand”).

The following explain how to replace the hand with external axes.

In the example below, the hand with two external axes is group S1, and the hand with three external axes is group S2.

When the manipulator moves with the hand: S1, the job control group is R1 + S1.

When the manipulator moves with the hand: S2, the job control group is R1 + S2.

Fig. 1-1: Example of Group Change

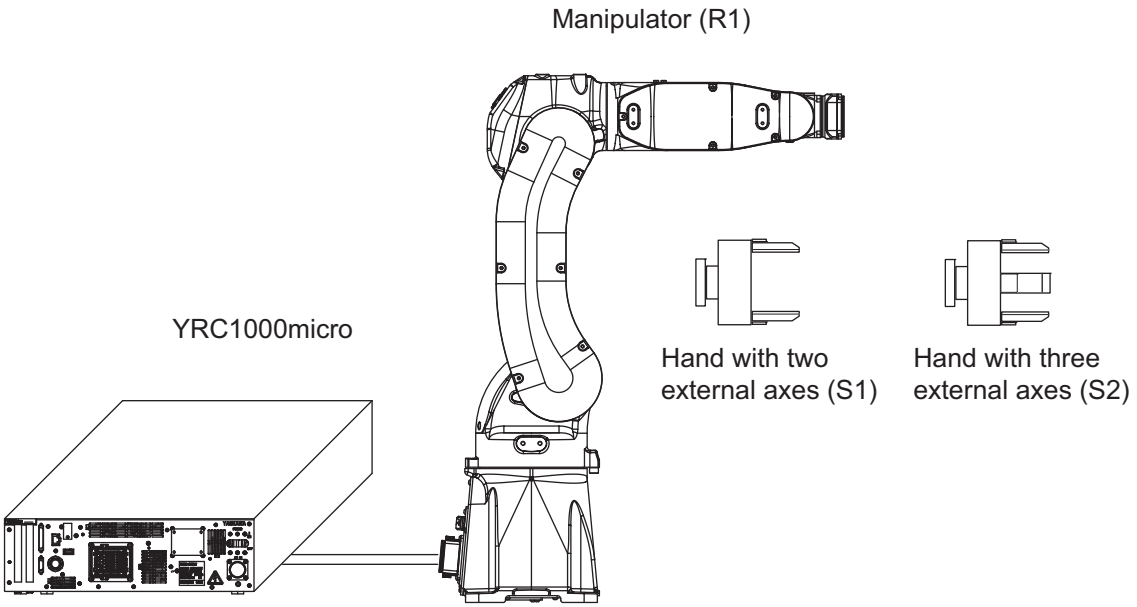

Fig. 1-2: Hand Changed to S1 (R1+S1)

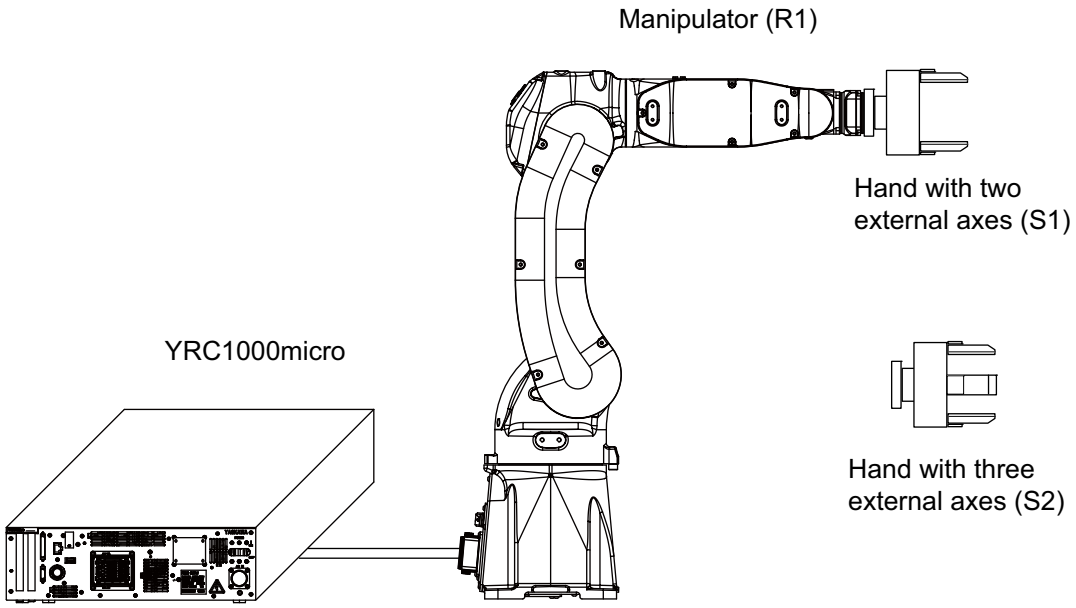

Fig. 1-3: Hand Changed to S2 (R1+S2)

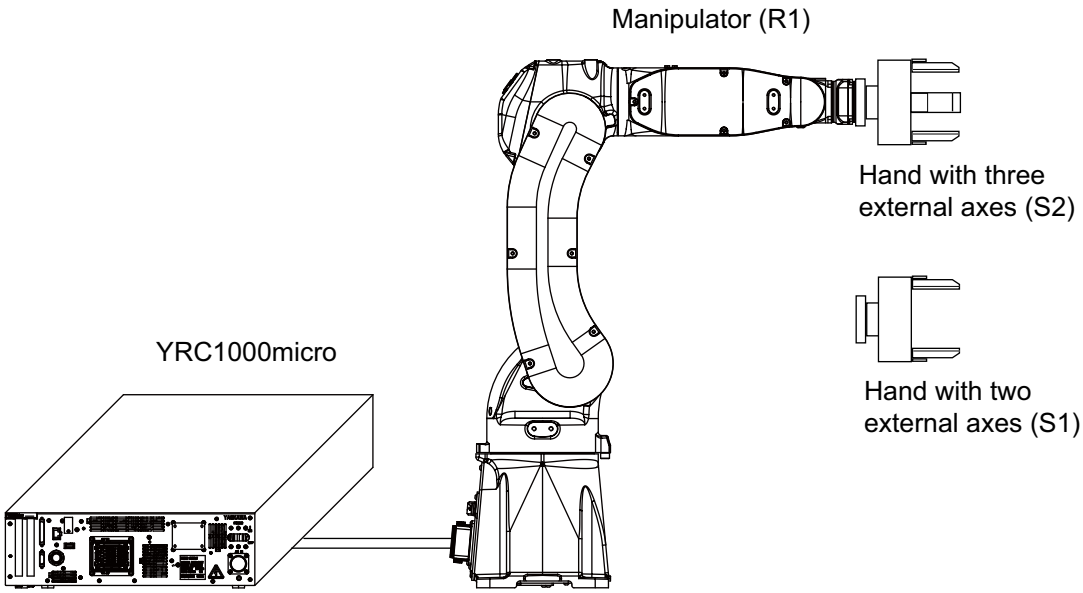

2 Group Change Instruction

To enable the group change function, execute the GRPCHG (Group Change) instruction.

The GRPCHG instruction can be registered as JOB of a single manipulator.

2.1 GRPCHG Instruction

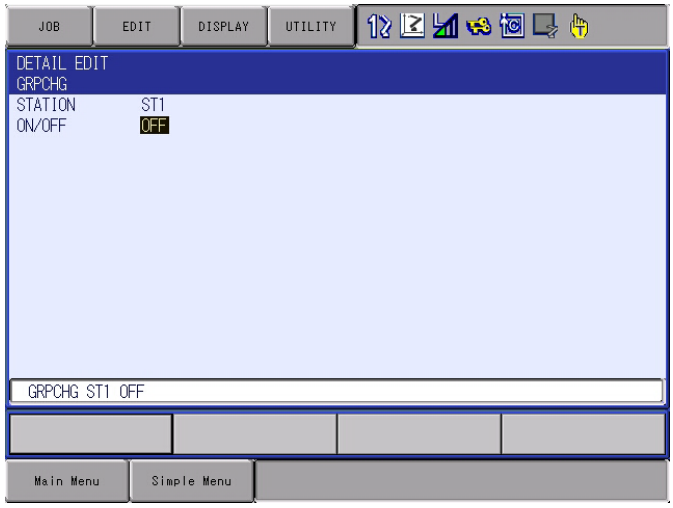

GRPCHG S1 ON
① ②

① Selects the group to be changed. The group can be selected among the groups for the group change.

② Specifies ON/OFF (attach/detach) status of the selected group.

ON : Turns ON the power supply of the specified motor.

OFF : Turns OFF the power supply of the specified motor.

2.2 Registration of Instruction

1. Move the cursor immediately before the line where the GRPCHG instruction is registered.
2. Press [INFORM LIST].
   – The INFORM LIST dialog box appears.

3. Select “DEVICE”.
   – The GRPCHG instruction appears.

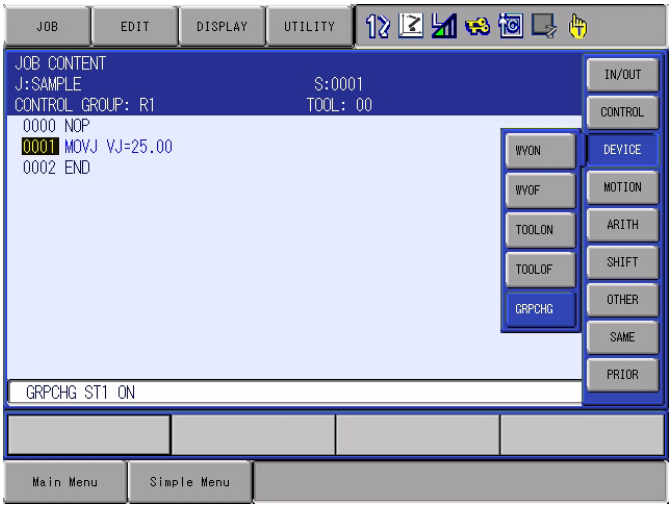

4. Select “GRPCHG”.
   – The GRPCHG instruction appears in the input buffer line.

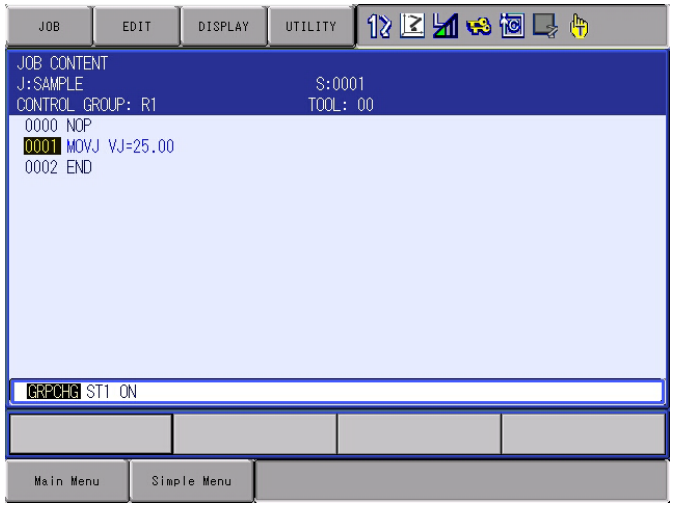

5. Modify numerical data.
   – <Registration with numerical data unchanged>
     Go on to the step 6 if the instruction in the input buffer line is registered with no change of the numerical data.

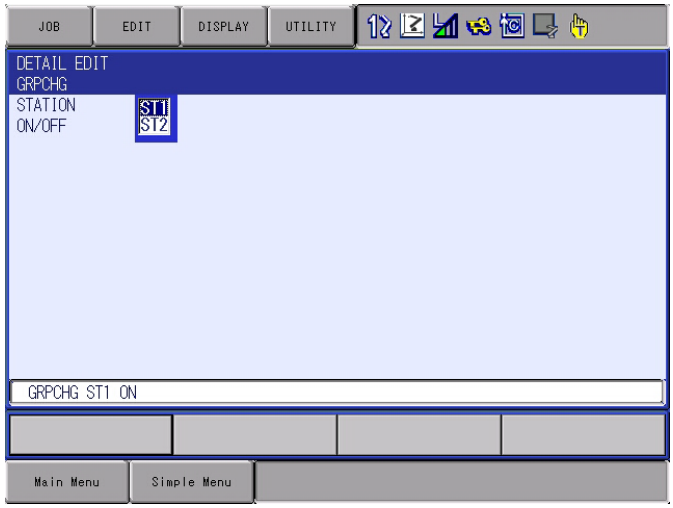

   – <Editing the additional items>
     If the additional items are modified, move the cursor to the instruction in the input buffer line and press [SELECT] to display the DETAIL EDIT window. After the settings, press [ENTER] and close the DETAIL EDIT window.

6. Press [ADD], then [ENTER].
   – The instruction displayed in the input buffer line is registered.

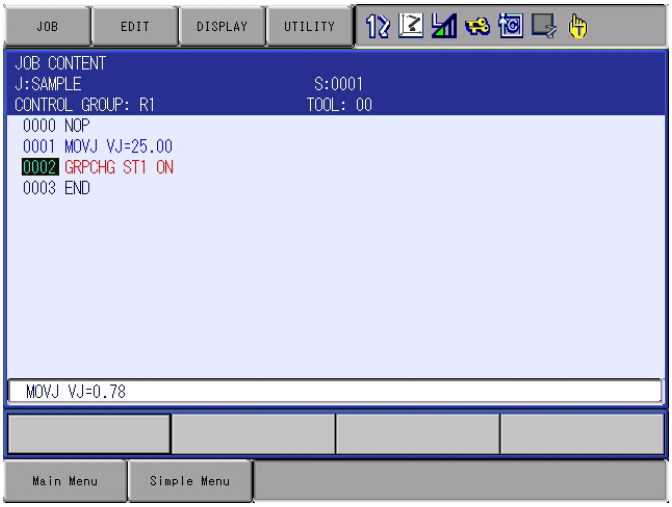

3 Signal Allocation

The GRPCHG instruction has to be executed with the manipulator holding the hand for change.

An alarm occurs if the hand which is not held by the manipulator is specified in the GRPCHG instruction.

Allocation of the following signals allows to identify the types and chuck/unchuck status of the hand.

3.1 Hand Identification Signals

The hand ID is identified by general input signals. Use the following parameters to specify which input signal is to be used.

S4C537: GRP identification signal (Start) for R1

S4C538: GRP identification signal (End) for R1

S4C539: GRP identification signal (Start) for R2

S4C540: GRP identification signal (End) for R2

<Example> When the GRP identification signals are allocated to IN10 (Start) to 11 (End)
(At S4C537=10, S4C538=11)

IN11	IN10	
0	0	→ Identified as GRP not connected
0	1	→ Identified as GRP S1 connected
1	0	→ Identified as GRP S2 connected
1	1	→ Identified as GRP S3 connected

0: OFF, 1: ON

3.2 Identification Signals for ATC Chuck/Unchuck

General input signals identify the ATC chuck/unchuck status. Use the following parameters to specify which input signal is to be used.

S4C553: For R1

S4C554: For R2

<Example> When the ATC chuck/unchuck identification signal is allocated to IN14
(At S4C553=14)

IN14	
0	→ Identified as “unchuck”
1	→ Identified as “chuck”

0: OFF, 1: ON

4 Job Examples

The following describe the job examples for attaching and detaching of the hand.

<Job for attaching the hand (S1)>

Job name: HAND1-ON

Control group: R1

```
NOP
MOVJ                : Moves to the position where the hand is attached.
TIMER T=0.200       : Timer for 0.2 seconds.
DOUT OT#(1) OFF     : Outputs the ATC chuck signal.
WAIT IN#(14)=ON     : Confirms the ATC chuck.
GRPCHG S1 ON        : Turns ON the hand servo power.
MOVJ                : Attaches the hand and moves.
.
.
END
```

<Job for detaching the hand (S1)>

Job name: HAND1-OFF

Control group: R1

```
NOP
MOVJ                : Moves to the position where the hand is detached.
TIMER T=0.200       : Timer for 0.2 seconds.
WAIT IN#(14)=ON     : Confirms the ATC chuck.
GRPCHG S1 OFF       : Turns OFF the hand servo power.
DOUT OT#(1) ON      : Outputs the ATC unchuck signal.
WAIT IN#(14)=OFF    : Confirms the ATC unchuck.
MOVJ                : Detaches the hand and moves the manipulator only.
.
.
END
```

5 Alarm Message

Alarm Number	Message	Sub Code	Cause	Remedy
4629	GROUP CHANGE ERROR	1	The group change parameter was invalid.	Validate the group change parameter.
		2	The GRPCHG instruction was executed while the external axis motor was servo ON.	The GRPCHG instruction cannot be executed for the group which is already in the servo ON status.
		3	The GRPCHG instruction was executed in unchuck status.	Check the chuck/unchuck status, then execute the GRPCHG instruction in chuck status.
		4	The group identification signal was not received.	After the group identification signal is received, execute the GRPCHG instruction in chuck status.
		5	The specified control group number and the group identification number were unmatched.	Match the specified control group number with the group identification number.
		6	The encoder PG power supply was OFF when the GRPCHG was ON.	(1) Reset the alarm, and then try again. (2) Turn OFF the power, then back ON. If the error occurs again, contact your YASKAWA representative.
		7	The encoder PG power supply was ON when the GRPCHG was OFF.	(1) Reset the alarm, and then try again. (2) Turn OFF the power, then back ON. If the error occurs again, contact your YASKAWA representative.
		8	The control group that corresponds to the received group identification signal did not exist.	(1) Reset the alarm, and then try again. (2) Turn OFF the power, then back ON. If the error occurs again, contact your YASKAWA representative.

YRC1000micro OPTIONS
INSTRUCTIONS
FOR GROUP CHANGE FUNCTION

HEAD OFFICE
2-1 Kurosakishiroishi, Yahatanishi-ku, Kitakyushu 806-0004, Japan
Phone +81-93-645-7703 Fax +81-93-645-7802

YASKAWA America Inc. (Motoman Robotics Division)
100 Automation Way, Miamisburg, OH 45342, U.S.A.
Phone +1-937-847-6200 Fax +1-937-847-6277

YASKAWA Europe GmbH（Robotics Divsion）
Yaskawastrasse 1, 85391 Allershausen, Germany
Phone +49-8166-90-100 Fax +49-8166-90-103

YASKAWA Nordic AB
Verkstadsgatan 2, Box 504 ,SE-385 25 Torsas, Sweden
Phone +46-480-417-800 Fax +46-486-414-10

YASKAWA Electric (China) Co., Ltd.
22F, One Corporate Avenue, No.222, Hubin Road, Huangpu District, Shanghai 200021, China
Phone +86-21-5385-2200 Fax ＋86-21-5385-3299

YASKAWA SHOUGANG ROBOT Co. Ltd.
No7 Yongchang North Road, Beijing E&T Development Area, China 100176
Phone +86-10-6788-2858 Fax +86-10-6788-2878

YASKAWA India Private Ltd. (Robotics Division)
#426, Udyog Vihar, Phase- IV, Gurgaon, Haryana, India
Phone +91-124-475-8500 Fax +91-124-475-8542

YASKAWA Electric Korea Corporation
35F, Three IFC, 10 Gukjegeumyung-ro, Yeongdeungpo-gu, Seoul, Korea 07326
Phone +82-2-784-7844 Fax +82-2-784-8495

YASKAWA Electric Taiwan Corporation
12F, No.207, Sec. 3, Beishin Rd., Shindian District, New Taipei City 23143, Taiwan
Phone +886-2-8913-1333 Fax +886-2-8913-1513

YASKAWA Electric (Singapore) PTE Ltd.
151 Lorong Chuan, #04-02A, New Tech Park, Singapore 556741
Phone +65-6282-3003 Fax +65-6289-3003

YASKAWA Electric (Thailand) Co., Ltd.
59,1st-5th Floor, Flourish Building, Soi Ratchadapisek 18,Ratchadapisek Road,
Huaykwang, Bangkok 10310, THAILAND
Phone +66-2-017-0099 Fax +66-2-017-0199

PT. YASKAWA Electric Indonesia
Secure Building-Gedung B Lantai Dasar & Lantai 1 JI. Raya Protokol Halim Perdanakusuma,
Jakarta 13610, Indonesia
Phone +62-21-2982-6470 Fax +62-21-2982-6741

Specifications are subject to change without notice
for ongoing product modifications and improvements.

YASKAWA

YASKAWA ELECTRIC CORPORATION

© Printed in Japan July 2017 17-07

MANUAL NO.
HW1484566